Military Technical College
Kobry El-Kobbah,
Cairo, Egypt.

16th International Conference on Applied Mechanics and Mechanical Engineering.

DETECTION OF STRESS STATE IN A PRESSURIZED THICK–WALLED CYLINDER BY MEASURING STRAINS ON ANNULAR PLATE SURFACE

E. E. EL-Soaly*

ABSTRACT

Measurement of Stresses and displacements inside thick cylinders, such as rocket propellant grain and barrels, is a difficult problem. It is observed that governing equations for solution of an annular plate, under edge moment, are analogous to that of thick walled cylinder under internal pressure. This analogy can be used to detect the stresses and displacement inside a thick walled cylinder by measuring of surface stresses and slope angle of an annular plate, which can be easily measured using electric wire strain gauges. In the present study, isotropic character for both plate and cylinder is considered. However, if same material is used for both, the obtained expressions are greatly simplified. Two cases of study are treated: a thick cylinder under internal pressure bounded by a rigid wall, as a model of rocket propellant grain, for the first, and with free outer-boundary, as a model of barrel for the second.

KEY WORDS

Pressure vessels, thick walled cylinders, circular plates, experimental stress analysis.

Nomenclature

a,b inner and outer radii	r,θ radial and tangential coordinates .
a / p indicates annular plate	Q_r shearing force per unit length.
$C_1,\ C_2,\ d_1,\ d_2,\ k_1,\ k_2$ Constants	t/c indicates thick cylinder
D flexural rigidity	u radial displacement of thick cylinder
E Young's Modulus	α angle of rotation in annular plate
h plate thickness	σ_r , σ_θ radial and tangential stresses
M bending moment per unit length	ε_r , ε_θ radial and tangential strains
p internal pressure in thick cylinder .	γ Poisson's ratio .
	* denotes annular plate material

---

* Department of Mechanical Engineering, Higher Technological Institute, 6th of October Branch.

INTRODUCTION

In contrast to thin-walled cylinders, when designing thick-walled cylinders allowance must be made for an uneven distribution of stresses through the thickness of the wall. The stress in a thick-walled vessel under internal pressure is tri-axial; radial, circumferential and axial.

Since the stresses and strains occurring in a thick-walled vessel are not measured directly, they are determined by measuring strains on the surface. Generally, strain gauges are employed to record strains electrically and the principal stresses and strains are determined from those measurements.

Rocket propellant grain may be treated as thick walled cylinder under several mechanical and thermal loadings. The measurement of induced stresses is a difficult problem due to special physical, mechanical and thermal properties of the grain. The use of gauges embedded in law modulus materials presents serious problems due to disturbance of the stress field by the gauges. The advisable method is to use models for purpose of design and leave the testing of actual grain only for verification at selected points on the grain surface. The freezing method of three–dimensional photo–elasticity is the suited for this type of problems, Durelli [1].

One of the most effect methods, to investigate direct stresses and strains occurring in a thick-walled cylinder subjected to internal pressure, was intruded by Geratebau [2]. An oil-filled cylinder is made up of two halves, and is sealed on both sides. Internal pressure is generated with a hydraulic pump. An eccentric groove is cut between the two halves of the cylinder, in which the strain gauges are mounted on the inner and outer surfaces of the cylinder, Fig.1, Geratebau [2]. The measured strains enabling the strain state, and hence the stress state, to be determined.

In the present study, the analogy of governing equations of thin annular plate under inside edge moment and that for thick walled cylinder under internal pressure is used to detect the internal stress state through the thickness of the thick-walled cylinder. The strain measurements, on the upper and lower surfaces of the annular plate, can be used to determine the strain field and hence the stress field, inside the corresponding thick–walled cylinder. On the other hand, the deflection and the rotational angle at a point on the annular plate can be used to determine the radial displacement at the same corresponding point in the thick-walled cylinder. Isotropic character for both thin annular plate and thick–walled cylinder is considered in the present study, however, cylindrically orthotropic materials can be treated following the same approach.

GOVERNING EQUATIONS

Consider a thick walled cylinder of inner radius a and outer radius b which is acted upon by internal pressure p, Fig. 2. The radial and tangential strains, ε_r and ε_θ, are given in terms of radial displacement u, as:

$$\varepsilon_r = \frac{du}{dr}, \qquad \varepsilon_\theta = \frac{u}{r} \tag{1}$$

For an isotropic material, with mechanical properties E and γ, the radial and tangential stresses σ_r and σ_θ are given in terms of ε_r and ε_θ, in the from;

$$\sigma_r = \frac{\mathrm{E}}{1-\gamma^2}(\varepsilon_r + \gamma\varepsilon_\theta), \qquad \sigma_\theta = \frac{\mathrm{E}}{1-\gamma^2}(\varepsilon_\theta + \gamma\varepsilon_r) \tag{2}$$

The non trivial equation of equilibrium, in terms of stresses, may be written in the form;

$$\frac{d\sigma_r}{dr} - \frac{\sigma_\theta - \sigma_r}{r} = 0. \tag{3}$$

Introducing the strain expressions (1) into the stress–strain relation (2) and then into the equilibrium equation (3) , a differential equation with one unknown u, is obtained as:

$$\frac{d}{dr}\left[\frac{1}{r}\frac{d}{dr}(ur)\right] = 0. \tag{4}$$

The solution of the obtained equation can be written as:

$$u = K_1\, r + \frac{K_2}{r} \tag{5}$$

where K_1 and K_2 are two constants of integration to be obtained from the boundary conditions. Introducing the obtained expression of u, equation (5) into equation (1), then into equation (2) the radial and tangential stresses are determined in the form:

$$\sigma_{\substack{r\\ \theta}} = \frac{E}{(1-\gamma)}\left[K_1 \mp K_2 \cdot\left(\frac{1-\gamma}{1+\gamma}\right)\frac{1}{r^2}\right] \tag{6}$$

which can be written, in a more compact form, as:

$$\sigma_{\substack{r\\ \theta}} = d_1 \mp \frac{d_2}{r^2} \tag{7}$$

where

$$d_1 = \frac{E}{1-\gamma} K_1, \qquad d_2 = \frac{E}{1+\gamma} K_2 \tag{8}$$

For a thin annular isotropic plate with mechanical properties E^* and γ^*, See Fig. 3, equation of rotational angle α, with respect to the radial variable r, may be written in the from, Reddy [3]:

$$\frac{d}{dr}\left[\frac{1}{r}\frac{d}{dr}(\alpha\, r)\right] = -\frac{Q_r}{D}, \tag{9}$$

where Q_r is the shearing farce in radial direction,

$$D^* = \frac{E^* \quad h^3}{12\left(1-\gamma^{*2}\right)} \tag{10}$$

D* is the plate flexural rigidity, and h is the uniform plate thickness.

Performing the double integration of equation (9), the rotational angle α can be expressed in the from:

$$\alpha = C_1\, r + \frac{C_2}{r} - \frac{1}{Dr} \int \left[r\int Q_r\, dr\right] dr, \tag{11}$$

where C_1 and C_2 are integration constants. In cases where the shearing force $Q_r = 0$, case of pure bending, leads to the following expression of α :

$$\alpha = C_1\, r + \frac{C_2}{r} \tag{12}$$

The radial and tangential bending moments M_r and M_θ can be written, in terms of α, in the from:

$$\begin{aligned} M_r &= D\left(\frac{d\alpha}{dr} + \gamma^* \frac{\alpha}{r}\right), \\ M_\theta &= D\left(\frac{\alpha}{r} + \gamma^* \frac{d\alpha}{dr}\right). \end{aligned} \tag{13}$$

The maximum values of stresses occur at the upper and lower faces of the plate in terms of M_r and M_θ in the form:

$$\begin{aligned} \sigma_r\left(\pm\frac{h}{2}\right) &= \pm\frac{6M_r}{h^2}, \\ \sigma_\theta\left(\pm\frac{h}{2}\right) &= \pm\frac{6M_\theta}{h^2}, \end{aligned} \tag{14}$$

Introducing the expression of α from eqn. (12) into eqn.(13) and then into eqn. (14), the radial and tangential stresses σ_r and σ_θ, in terms of radial variable, are:

$$\sigma_{r\atop\theta}\left(\pm\frac{h}{2}\right) = \frac{E^* h}{2\left(1-\gamma^r\right)}\left[C_1 \mp \frac{(1-\gamma}{(1+\gamma^*)} C_2 \frac{1}{r^2}\right] \tag{15}$$

Comparing the expressions of radial displacement in thick cylinder ,eqn.(5), with the angle of ration in thin annular plate α in Eqn. (12) , It is observed that they have the same form, with different values of constants K_1, K_2 and C_1, C_2. similarly, the expression of radial and tangential stresses in thick walled cylinder equation (6) and the maximum values of radial and tangential stresses in annular plate, equation (15), have the same form with respect to the radial coordinate r.

The radial and tangential stresses in the annular plate can be, easily, measured using electric wire strain gauges. In addition, the variation of lateral deflection w can be measured and plotted against r. From the deflection curve, the angle of rotation α can be deduced at a certain value of r. Using the measured values of surface stresses and lateral deflection of the annular plate, the corresponding values of the thick walled cylinder can be obtained the values of the constants K_1 and K_2 can be obtained from the boundary conditions of the thick walled cylinder. The corresponding values of C_1 and C_2 are determined from the boundary conditions of the annular plate.

Two practical cases of study are considered. The first case deals with a thick cylinder with outer rigid wall and is subjected to internal pressure (rocket propellants). The second case describes a thick cylinder under internal pressure (barrels).

FIRST CASE OF STUDY

Consider a thick walled cylinder with inner radius a and outer radius b. The cylinder is subjected to an internal pressure p and has a rigid wall at its outer radius b, Fig. 4. The corresponding boundary conditions are;

$$\begin{aligned} at \quad r &= a, \ \sigma_r = -p, \\ at \quad r &= b, \ u = 0. \end{aligned} \tag{16}$$

Introducing the boundary conditions (16) into the expressions (5) and (6), the values of the constants K_1 and K_2 are obtained as:

$$\begin{aligned} K_1 &= \frac{-(1-\gamma) \quad p}{E\Delta}, \\ K_2 &= \frac{(1-\gamma) \quad b^2 p}{E\Delta}, \end{aligned} \tag{17}$$

where E, γ are the young's modulus and Poison's ratio of the thick walled material,

$$\Delta = 1 + \frac{1-\gamma}{1+\gamma}\left(\frac{b^2}{a^2}\right) \quad . \tag{18}$$

Hence, the stress expressions (6) are reduced to;

$$\sigma_{\substack{r\\ \theta}} = \frac{-p}{\Delta}\left[1 \pm \frac{1-\gamma}{1+\gamma}\left(\frac{b^2}{r^2}\right)\right] \tag{19}$$

Similarly, the radial displacement u is obtained in the from:

$$u = \frac{-p(1-\gamma)}{E\Delta}\left[r - \frac{b^2}{r}\right] \tag{20}$$

The corresponding annular plate is acted upon by inner edge moment M_a and the plate is fixed at the outer edge, Fig. 5. For this case of loading, the boundary conditions are:

$$\begin{aligned} &at \quad r = a, \quad M_r = M_a, \\ &at \quad r = b, \quad \alpha = 0. \end{aligned} \tag{21}$$

Substituting these conditions into expressions (12) and (13), the values of the constants C_1 and C_2 are obtained as:

$$\begin{aligned} C_1 &= \frac{M_a}{D^* \Delta^* (1+\gamma^*)}, \\ C_2 &= \frac{-M_a b^2}{D^* \Delta^* (1+\gamma^{*)}}, \end{aligned} \tag{22}$$

where the symbol * relates to the annular plate material.

Introducing the obtained values of C_1 and C_2 equation (22) into expressions (12) and (14), the angle of rotation and the surface radial and tangential stresses are obtained as:

$$\alpha(r) = \frac{M_a}{D^* \Delta^{*\cdot\cdot}(1+\gamma^*)}\left(r - \frac{b^2}{r^2}\right) \tag{23}$$

It is observed that similar expressions are obtained for the radial displacement, in thick cylinder, u in expression (20) and the angle of rotation, in thin annular plate, α expression (23). Also, similar expressions for stresses in thick cylinder, equation (19) and surface stresses, in thin annular plate, equations (24). Hence, for certain radius ratio λ = r/b, the radial displacement u can be obtained, if the angle α is measured as :
where

$$\sigma_{\substack{r\\ \theta}}\left(r, \frac{h}{2}\right) = \frac{6M_a}{h^2 \Delta^*}\left[1 \pm \frac{1-\gamma^*}{1+\gamma^*}\left(\frac{b^2}{r^2}\right)\right] \tag{24}$$

$$u(\lambda) \Big| = \frac{-p(1-\gamma)D^* \Delta^* (1+\gamma^*)}{E\Delta \quad M_a}\alpha(\lambda) \Big|, \tag{25}$$

Similarly, the radial and tangential stresses in thick cylinder and annular plate are related as:

$$\sigma_{\substack{r\\\theta}}(\lambda)\Big|_{t/c} = \frac{-ph^2\,\Delta^*\,(1-\gamma^{*2})}{6\Delta M_a}\left[\frac{1\pm\dfrac{(1-\gamma)}{(1+\gamma)}\dfrac{1}{\lambda^2}}{1\pm\dfrac{(1-\gamma^*)}{(1+\gamma^*)}\dfrac{1}{\lambda^2}}\right]\sigma_{\substack{r\\\theta}}\left(\lambda,\frac{h}{2}\right)\Big|_{a/p} \tag{26}$$

where t /c indicates thick cylinder, and a/p indicates annular plate.

If the Poisson's ratio for the annular plate equals to that of thick cylinder, $\gamma^* = \gamma$, the relation (26) reduces to the from:

$$\sigma_{\substack{r\\\theta}}(\lambda)\Big|_{t/c} = \frac{-ph^2\,\Delta^*\left(1-\gamma^{*2}\right)}{6\,\Delta M_a}\,\sigma_{\substack{r\\\theta}}\left(\lambda,\frac{h}{2}\right)\Big|_{a/p} \tag{27}$$

SECOND CASE OF STUDY

Consider a thick walled cylinder under internal pressure p. The boundary conditions are, Fig. 6:

$$\begin{aligned} at\quad r &= a,\quad \sigma_r = -p\,,\\ at\quad r &= b,\quad \sigma_r = 0\,. \end{aligned} \tag{28}$$

Introducing these boundary conditions into expressions (7), the constants K_1 and K_2 can be determined. Hence, the stress expressions (7) lead to:

$$\sigma_{\substack{r\\\theta}} = \frac{pa^2}{b^2-a^2}\left[1\mp\frac{b^2}{r^2}\right] \tag{29}$$

Similarly, the radial displacement expression (5) leads to:

$$u = \frac{p(1-\gamma)\,a}{E\left(b^2-a^2\right)}\left[r+\frac{(1+\gamma)}{(1-\gamma)}\frac{b^2}{r}\right] \tag{30}$$

The corresponding case is an annular plate simply supported at the outer edge r = b and subjected to inner edge moment M_a, Fig. 7. The boundary conditions are:

$$\begin{aligned} at\ r &= a\,,\quad M_r = M_a\,,\\ at\ r &= b\,,\quad M_r = 0\,. \end{aligned} \tag{31}$$

Introducing the boundary conditions (31) into bending moment expressions (13), the constants C_1 and C_2 are obtained as:

$$C_1 = \frac{-M_a \; a^2}{D^* \left(1+\gamma^*\right)\left(b^2 - a^2\right)} \quad ,$$
$$C_2 = \frac{-M_a \; a^2 \, b^2}{D^* \left(1+\gamma^*\right)\left(b^2 - a^2\right)} \quad . \tag{32}$$

Hence, at a general radians r, the bending moment expressions (13) lead to:

$$M_{\substack{r\\ \theta}}(r) = \frac{-M_a \; a^2}{b^2 - a^2}\left[1 \mp \frac{b^2}{r^2}\right] \quad , \tag{33}$$

and the stress expressions (14) lead to:

$$\sigma_{\substack{r\\ \theta}}\left(r, +\frac{h}{2}\right) = \frac{-6\, M_a \; a^2}{h^2\left(b^2 - a^2\right)}\left[1 \mp \frac{b^2}{r^2}\right] \tag{34}$$

Knowing the values of constants C_1 and C_2 in equation (32), the angle of rotation α expression (12) leads to:

$$\alpha(r) = \frac{-M_a \; a^2}{D^*\left(1+\gamma^*\right)\left(b^2 - a^2\right)}\left[r + \frac{\left(1+\gamma^*\right)}{\left(1-\gamma^*\right)} \; \frac{b^2}{r^2}\right] \tag{35}$$

Comparing the stress expressions (29) and (34), the stresses in thick walled cylinder at radius ratio $\lambda = r/b$ are related to that in thin annular plate as:

$$\sigma_{\substack{r\\ \theta}}(\lambda)\Big|_{t/c} = \frac{ph^2}{6M_a} \; \sigma_{\substack{r\\ \theta}}\left(\lambda, \frac{h}{2}\right)\Big|_{a/p} \tag{36}$$

Similarly, comparing expressions (30) and (35) , the radial displacement u in thick cylinder is related to the angle of rotation α, in annular plate, as:

$$u(r)\Big| = \frac{p(1-\gamma)\, D^* \; \left(1+\gamma^*\right)}{E \quad M_a}\left[\frac{r + \frac{(1+\gamma)}{(1-\gamma)}\frac{b^2}{r^2}}{r + \frac{\left(1+\gamma^*\right)}{\left(1-\gamma^*\right)}\frac{b^2}{r^2}}\right] \alpha\,(\mathbf{r}) \tag{37}$$

If the Poisson's ration γ^* is taken such that $\gamma^* = \gamma$ and for radius ratio $\lambda = r/b$, expression (37) is reduced to:

$$u(\lambda) = \frac{p\left(1-\gamma^2\right) \quad D^*}{E \quad M_a} \; \alpha(\lambda) \tag{38}$$

CONCLUSION

A simple analytical method is present to determine the stresses and deformation in pressurized thick cylinders using actual measured corresponding values on annular plates. An analogical analysis, between thick cylinders under internal pressure and thin annular plates acted upon by pure bending, is presented, similar expressions are obtained for principal stresses and radial displacement. Isotropic materials for thick cylinders and annular plates are considered. Similar, rigorous, analysis can be done for cylindrically orthotropic materials.

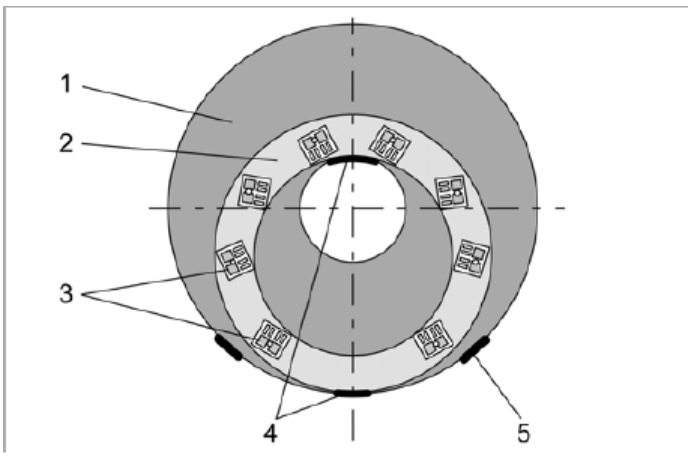

Fig. 1. Strain gauge layout in cylinder wall and on the surface: 1 cylinder, 2 eccentric groove, 3 strain gauge measuring point, radial/hoop,4 strain gauge measuring point, hoop, 5 strain gauge measuring point, axial [7].

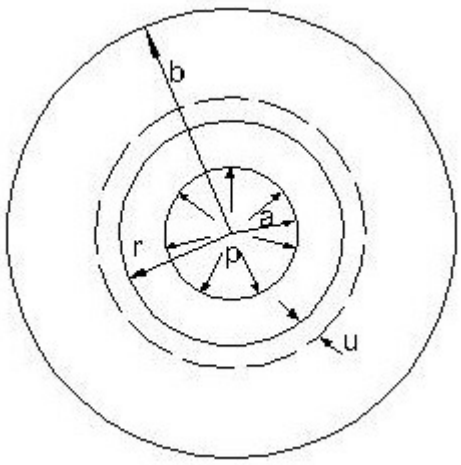

Fig. 2. Thick cylinder under internal pressure

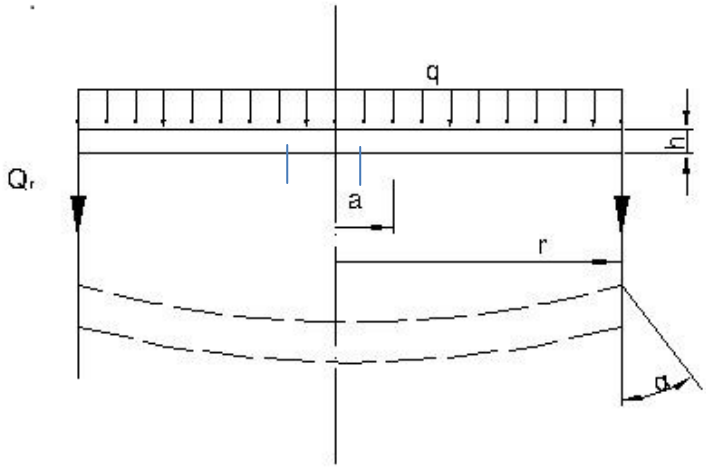

Fig. 3. Thin annular plate under lateral loading.

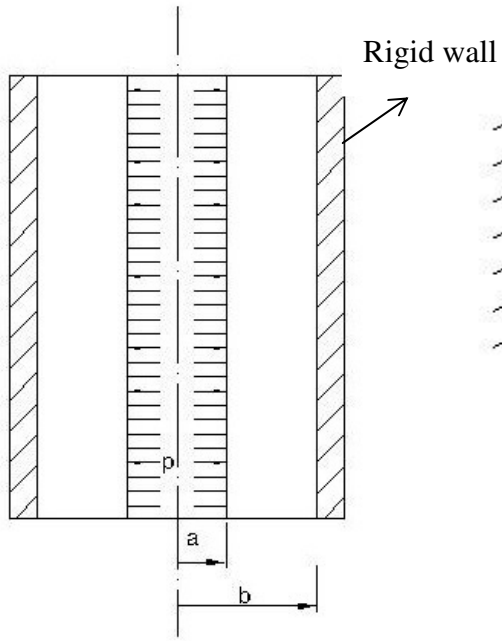

Fig. 4. Thick cylinder with a rigid wall.

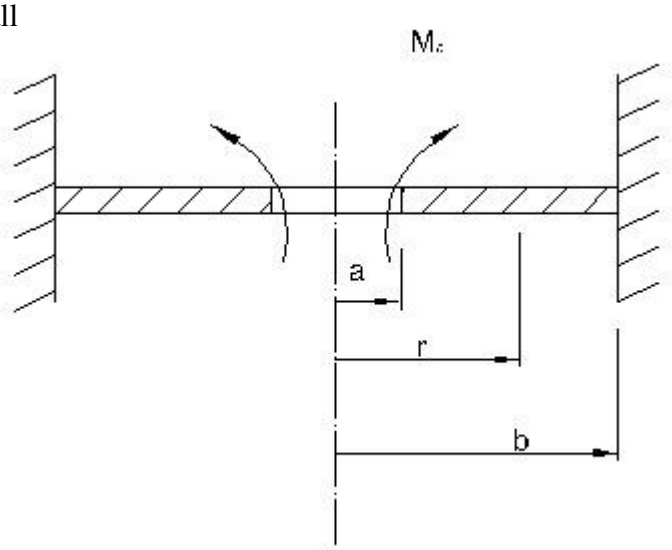

Fig. 5. Thin annular plate under bending moment at inner radius

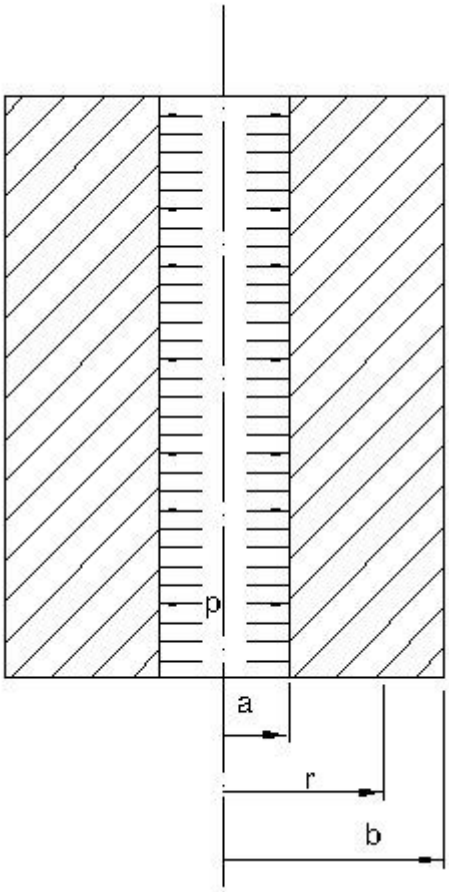

Fig. 5. Thick cylinder under internal pressure

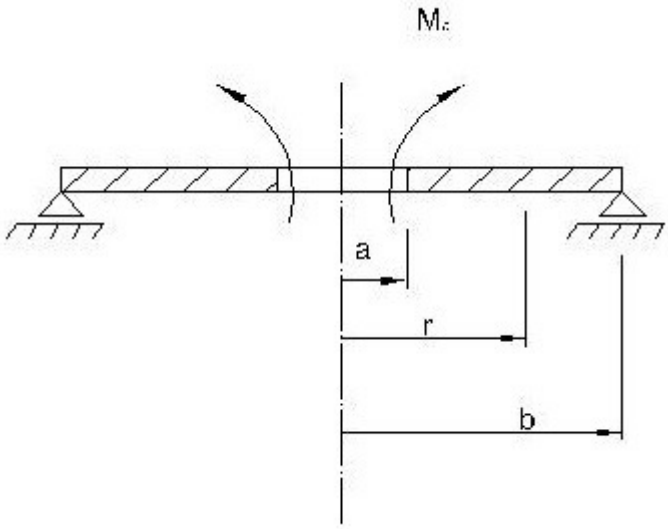

Fig. 6. Simply supported annular plate under bending moment at inner radius.

REFERENCES

[1] Durelli, A.J., “Applied Stress Analysis", Civil Engineering and Engineering Mechanics Series, N.M. New mark and W.J Hall (1970).
[2] G.U.N.T Geratebau,“ Stress and Strain Analysis on a Thick– Walled Cylinder” Hans kampring, 15 – 17, D – 22885 Barsbuttel (2013).
[3] Reddy, J.N.,“ Continuum Mechanics“, Cambridge University Press New York, NY 10013 – 2473, USA www. Cambridge (2010).
[4] Dally, J.W and Frily, W., "Experimental Stress Analysis”, Mc GRAW – HILL (1978).
[5] Barber, J.R,“ Bending of an Incomplete Annular Plate”, Journal of Strain Analysis, Vol. 14, No. 3 (1979).
[6] Renganathan than, K. et al., "Failure Pressure Estimations on a Solid Propellant Rocket Motor with a Circular Perforated Grain", International Journal of Pressure Vessels and Piping, Vol. 76, pp. 955 – 963 (1999).
[7] Barber, J.R.,“Force and Displacement Influence Functions for The Circular Ring”, Journal of Strain Analysis, Vol. 13, pp.77- 81 (1978).